DRB型电动加油小车

DRB type electronic refuel bogie

使用说明书

Using instruction

河南惠亚机电设备有限公司

Henan Hiya Mechanical Equipment Co., Ltd.

2019 年 1 月

1. DRB型电动加油小车的用途及技术性能

1. Application and technical performance of DRB type electronic refuel bogie

1.1 用途

1.1 Application

DRB电动加油小车，是一种把高压润滑脂泵置于可移动小车上，结构紧凑、方便灵活地为各种设备润滑点加注润滑脂，一次可向一点或多点加注润滑脂，可解决大型设备中难以润滑部位的润滑作用。适用于各种干油（润滑脂）润滑的场合，对于润滑点多，分布范围分散的润滑点尤为适用。它广泛用于冶金、矿山、电站、水泥、制糖和建筑、运输机械及其它重型机械上。

DRBtype electronic refuel bogie is a kind of bogie that place high-pressure grease pump on movable bogie, inject grease to all kinds of equipments ’ lubrication points compactly ,conveniently and flexible,it can inject grease to one point or several points at one time and solve the problem of large equipment ’s lubrication parts which is difficult to lubricate.It can apply to all kinds of dry oil lubrication(grease) occasion,especially applies to multi-lubrication points and dispersive-distributed lubrication points.It is widely used in metallurgy, mining, power plants, cement, sugar and construction,

transportation machinery and other heavy machinery.

该产品分为三种流量系列，共有七种规格。

The products are divided into three flow series, seven specifications in total.

1.2 技术性能（见下表）

1.2 Technical performance(shown as the chart below)

型号 Model	公称压力 Nominal pressure MPa	额定给油量 Rated oil amount ml/min	贮油桶容积 Oil storage volume L	减速电机 Gear motor		适用环境温度 Applicable Environment Temperature ℃	重量 Weight kg
				功率 Power KW	电压 Voltage V		
DRB-P 120z	40	120	30	0.75	380	0-80	56

使用介质， 0＃-1 ＃的润滑脂。

Using medium,0 ＃-1 ＃ grease.

2. 结构及工作原理

2. Structure and working theory

2.1 结构组成

2.1 structural composition

DRB 电动加油小车如（图 1）所示。加油小车主要由电动润滑泵和手推小车组成，润滑泵由贮油筒 1、柱塞泵 2、减速器 3 和电动机 4 等组成。其工作原理系统图见（图 2）。

DRB electronic refuel bogie(as shown in drawing 1).Refuel bogie mainly composed of electronic lubrication pump and trolley,lubrication pump is composed of oil storage cylinder,plunger pump2,reducer3 and motor4 etc.Its working

theory system is shown as drawing(drawing 2).

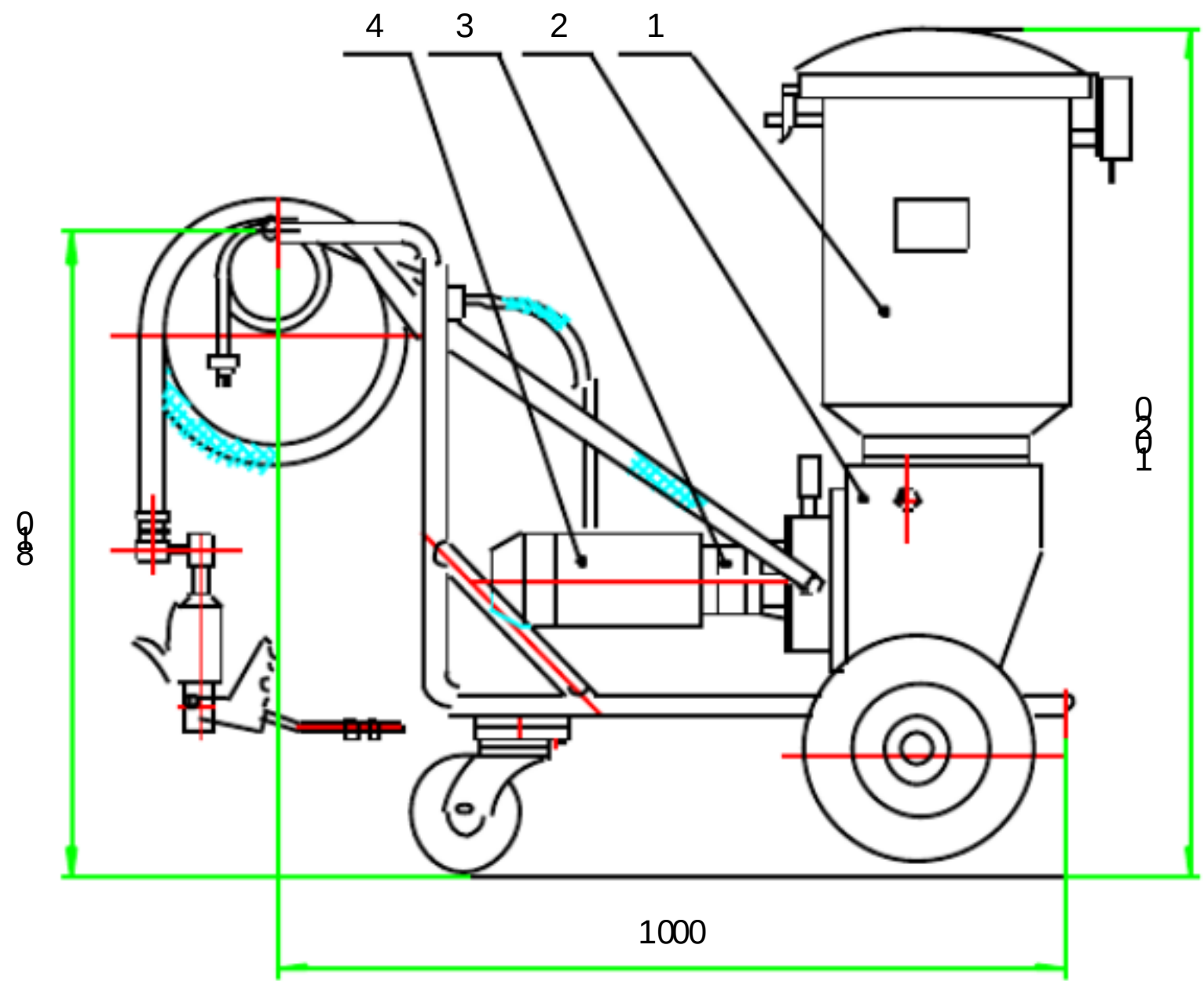

（图1）

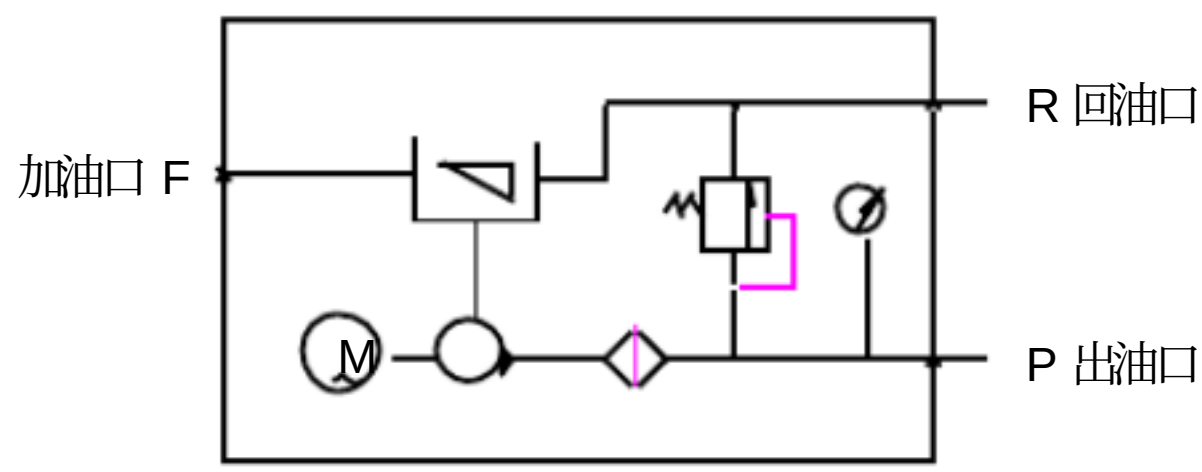

（图2）

2.2 工作原理

2.2 Working theory

润滑泵工作原理如（图 3）所示。泵起动，电机减速后，转动偏心机构 1，推动滑架 2，使泵室内二组柱塞 3、6 作往复运动。当一组柱塞吸油时，另一组柱塞压油，随着偏心机构的连续运转，从而实现连续供油。每组柱塞由工作柱塞 3、6 控制柱塞 4、7 和顶杆 5、8 组成。控制柱塞由弹簧力推动起启闭油口作用，并由滑架 2 迫使顶杆将其推入极限位置，保证出油口完全封闭。

Lubrication pump working theory is shown as (drawing 3).After pumpstarts and motor slows down,turn the eccentric mechanism 1, push the slid rack 2 to make the 2 groups of plunger 3,6 in pump making advance and return movement.When a group of plunger absorbing the oil,the other group of plunger pressing oil along with continuously rotation of the eccentric mechanism to realize continuous oil providing.Each plunger is composed of working plunger 3,6,control plunger 4,7 and mandril 5,8.Control plunger is pushed by spring power to open and close oil port,and force mandril by slid rack to push it to ultimate position to guarantee complete seal of outlet oil port.

润滑泵贮油筒内装有螺旋油盘和刮油板，在棘轮的作用下，单向顺时针转动，迫使润滑脂进入泵室，同时可消除气泡，使泵

不吸空。

Lubrication pump oil storage cylinder is equipped with Spiral oil pan and oil scraper plate,it rotates one-way clockwise under the function of ratchet wheel,forces grease into pump room,at the same time it can eliminate bubbles to make sure the pump doesn't absorb empty.

3. 使用和维护

3. Use and maintenance

3.1 使用方法和注意事项

3.1 Using methods and precautions

在开始使用前，必须向泵的减速器里加注 120～150ml 工业齿轮润滑油 N220。工作 1000 小时更换一次润滑油。

Before starting ,120～150ml industrial gear lubrication oil N220 must be poured into the reducer of pump.Lubrication oil should be changed every 1000 working hours.

三相电源接通后（三相电源插座专用，注意电机反转，电机风叶应顺时针旋转），起动润滑泵，观察压力表是否能达到系统压力。把加油枪对准废油桶扳动枪机，应该有压力油射出。放开枪机即被封住，这样就可以正常使用。

After three-phase power supply is switched on(three-phase power socket dedicated,pay attention to the motor reversal, motor fan should rotate clockwise),start the lubrication pump,observe if the gauge can reach the system pressure.Target refuel gun to waste drum pulled

trigger,there should be pressure oil coming out.It is sealed after loosing the trigger so that it can be used normally.

3.2 电器控制说明

3.2 Electronic control instruction

3.2.1 首先插上三相插头 ,确认电源指示灯亮。

3.2.1 First stick in the three-phase power socket,make sure that the power indicator light is on.

3.2.2 按动“启动”开关，油泵开始运转，再按”停止“开关，油泵立即停止运转。

3.2.2 Press “start ”switch,oil pump starts to run,press “stop ”switch,oil pump stops running immediately.

3.3 维护

3.3 Maintenance

润滑泵为了保证系统工作安全、可靠，防止造成意外，设有双层保险机构，第一油泵具有调节压力的溢流阀，当压力超过设定值后，溢流阀即被打开，将油脂返回贮油筒内；另外在泵出油过滤器处设有安全爆破薄片，如超压就会击穿爆破片，这两种保护措施都会防止发生设备事故。

Lubrication pump is equipped with double insurance institutions in order to makesure the safety and reliability of working system,prevent from causing accident,the first oil pumphas relief valve which can adjust pressure,when the pressure exceeds the setting point,relief valve opens and

transfers grease back to oil storage cylinder;in addition there is a safety blasting chip on oil outlet filter of the pump,the chip will breakdown if overpressure,both of the protective measures will prevent equipment accidents.

泵溢流阀在产品出厂时调定压力为 40MPa，根据润滑系统使用的工作压力，允许适当调节溢流阀的压力。

The adjust pressure of pump relief valve is 40MPa when product coming out of factory,the pressure of relief valve can be adjusted properly according to the working pressure of lubrication system while using.

泵的出口和贮油筒的加油口处都有网式过滤器，在工作一定时期后，必须检查和清洗，清除积沉在铜丝网上的污物、沉渣。

There are net filters both on outlet of pump and input port of oil storage cylinder,which must be checked and washed after a certain period of working in order to eliminate the dirt,sediment that accumulated on copper wire net.